STERLING ELECTRIC, INC.

DRIP-PROOF TYPE
SQUIRREL CAGE ROTOR
FOOT MOUNTED
(EXTRA MAX)

PROJECT NO:

CUSTOMER:
PO. NO:
ORDER NO:

OUTPUT	POLE	SYN. SPEED	VOLT.	FREQ	INSUL.	TIME RATING	MODEL	FRAME NO.
		RPM.	V.	HZ	F	CONT.	ODP	256T

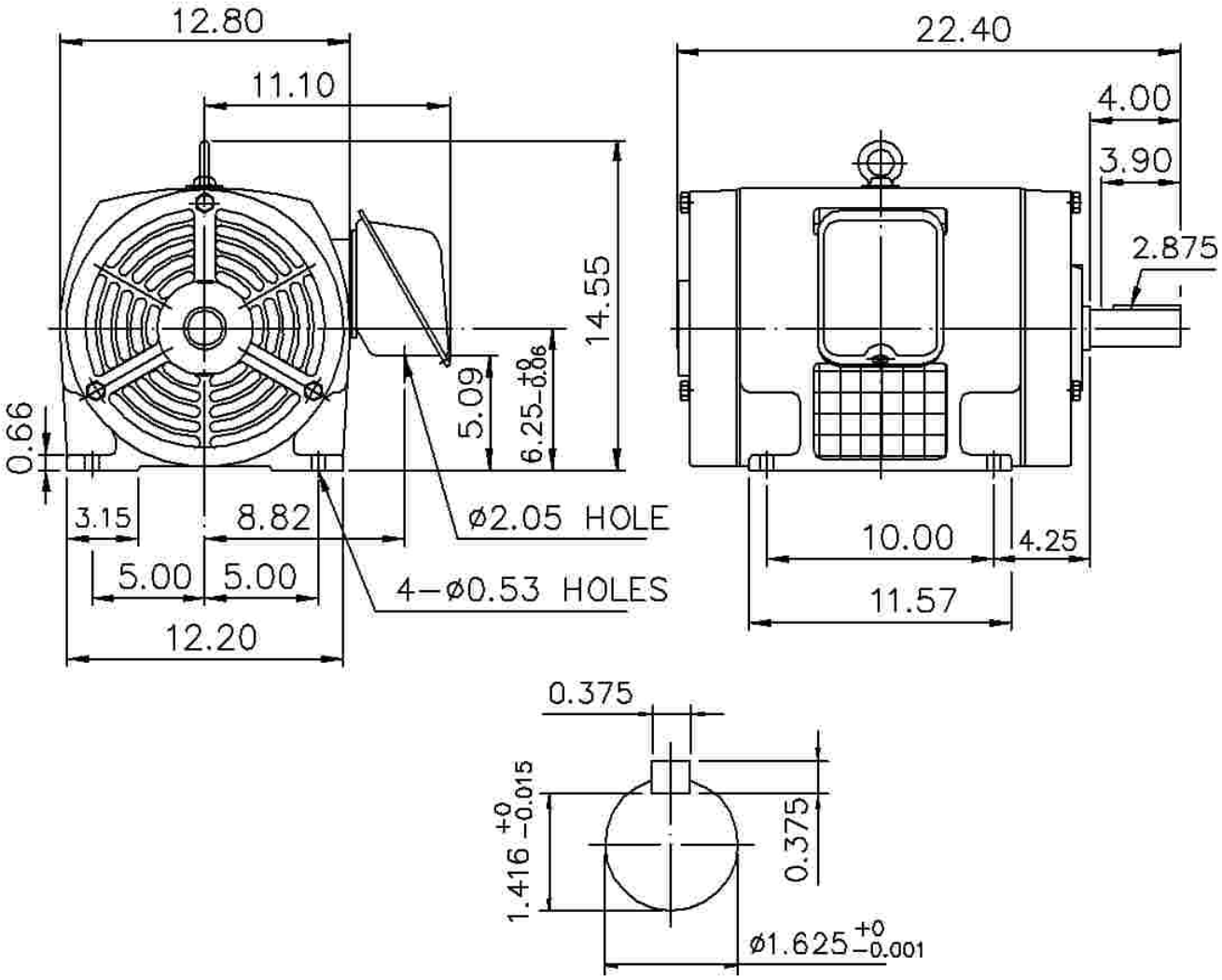

NOTE: 1.APPROXIMATE WEIGHT = 290 LBS
2.DRIVE END BEARING 6310zz
OPPOSITE DRIVE END BEARING 6208zz

STERLING ELECTRIC, INC.

DESIGNED		DIMENSIONS IN INCHES
CHECKED		3RD ANGLE PROJECTION
APPROVED		DATE: