FILE NO:	
CUSTOMER:	
PO. NO:	
ORDER NO:	

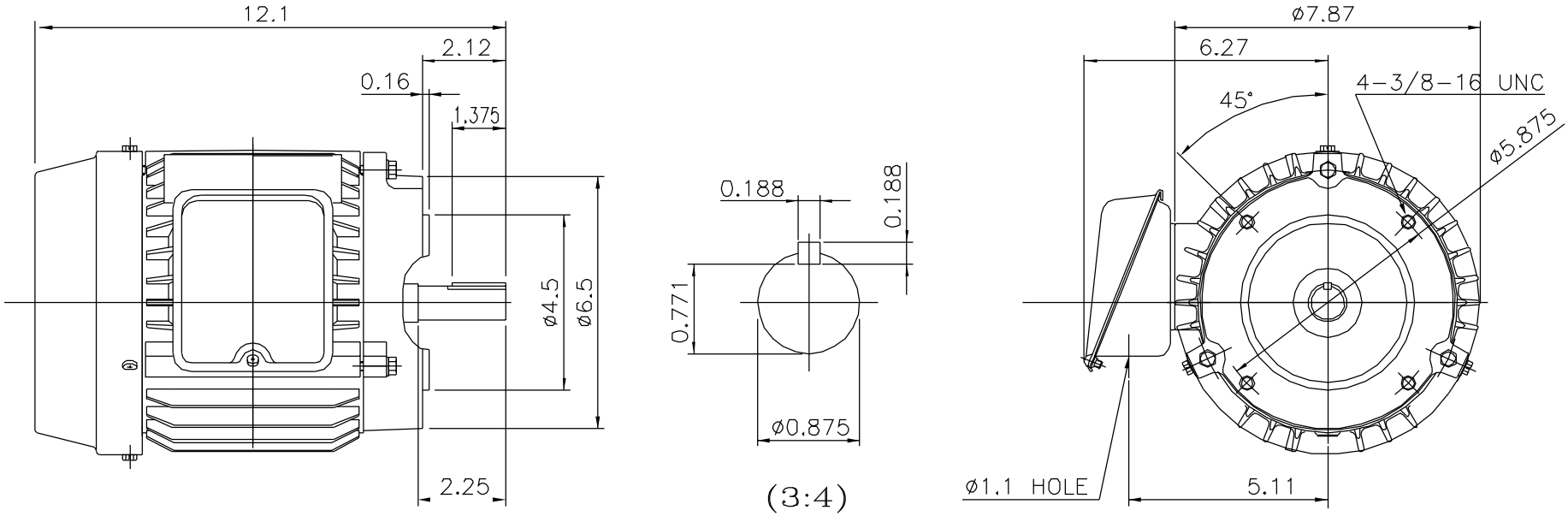

#143TC (1:4)

STERLING ELECTRIC, INC. IRVINE, CA	OUTLINE 3-PHASE INDUCTION MOTOR	DESIGNED		DIMENSIONS IN INCHES
		CHECKED		3RD ANGLE PROJECTION
		APPROVED		DWG. NO: 143TC