C–FACE FOOTED XB STAINLESS STEEL AND DB ROLLED STEEL MOTOR

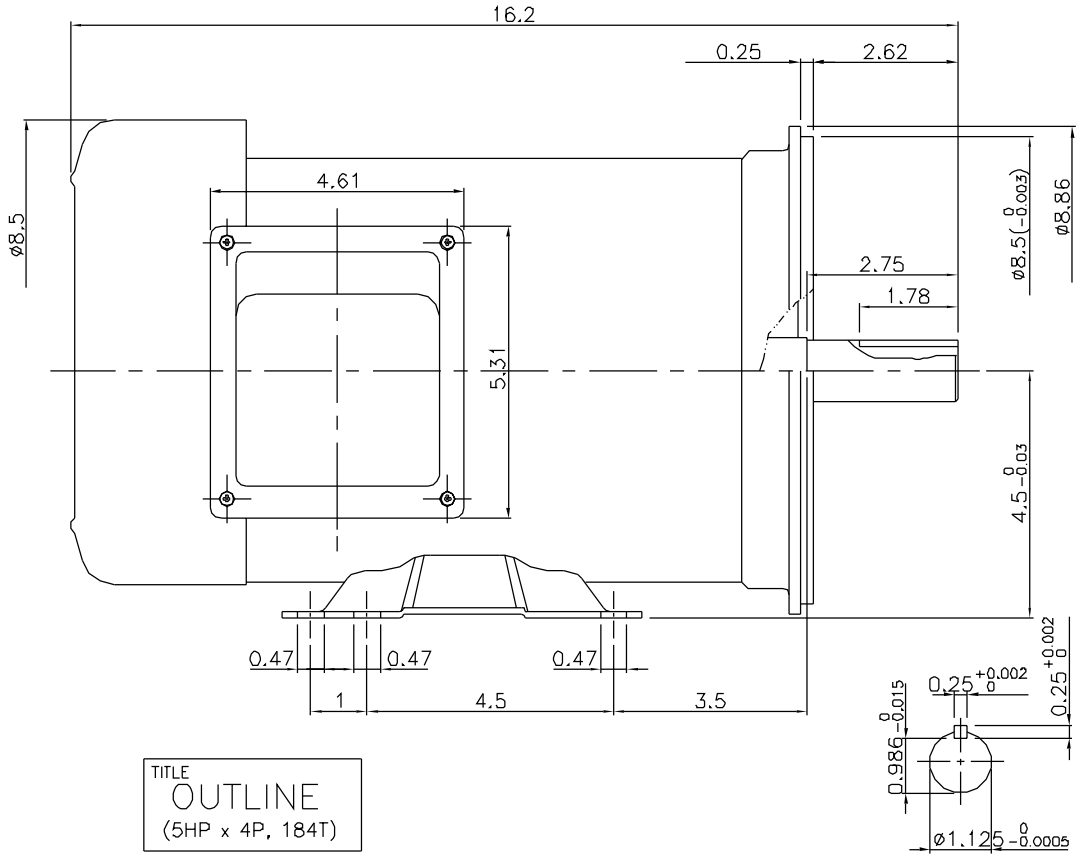

SHAFT DETAIL

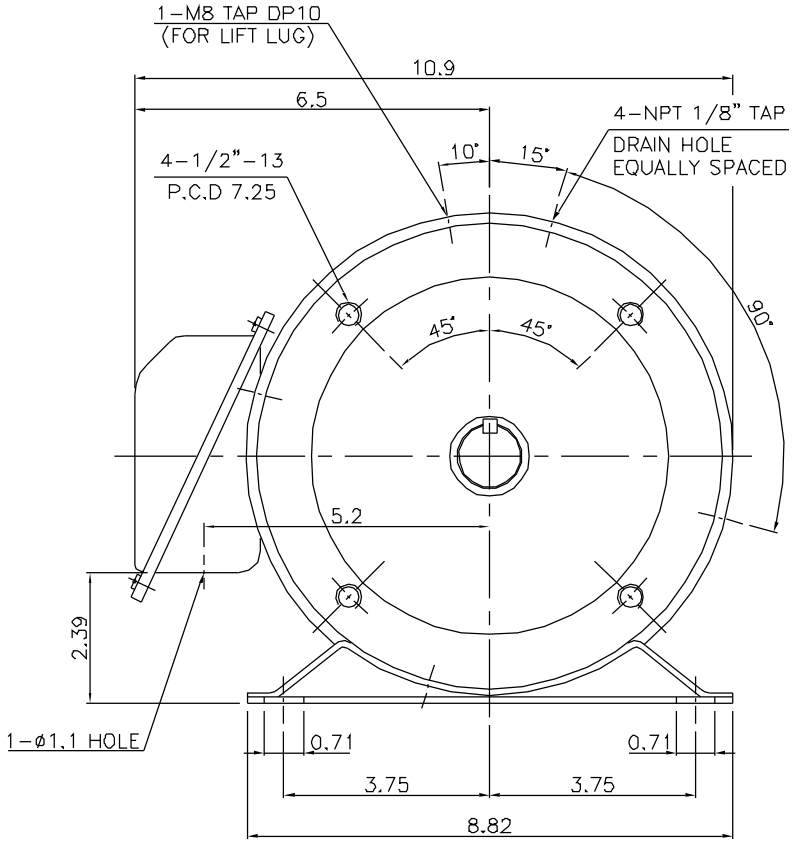

TITLE
OUTLINE
(5HP x 4P, 184T)

STERLING
ELECTRIC, INC.