C–FACE FOOTED XB STAINLESS STEEL AND DB ROLLED STEEL MOTOR

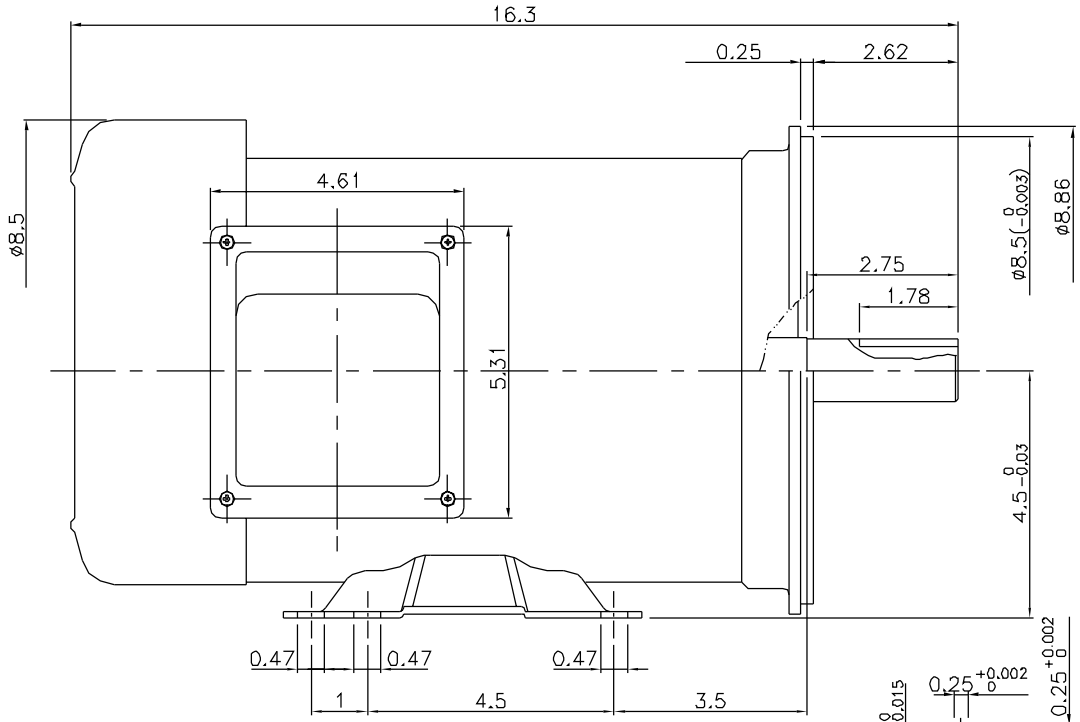

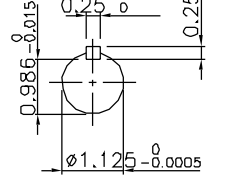

SHAFT DETAIL

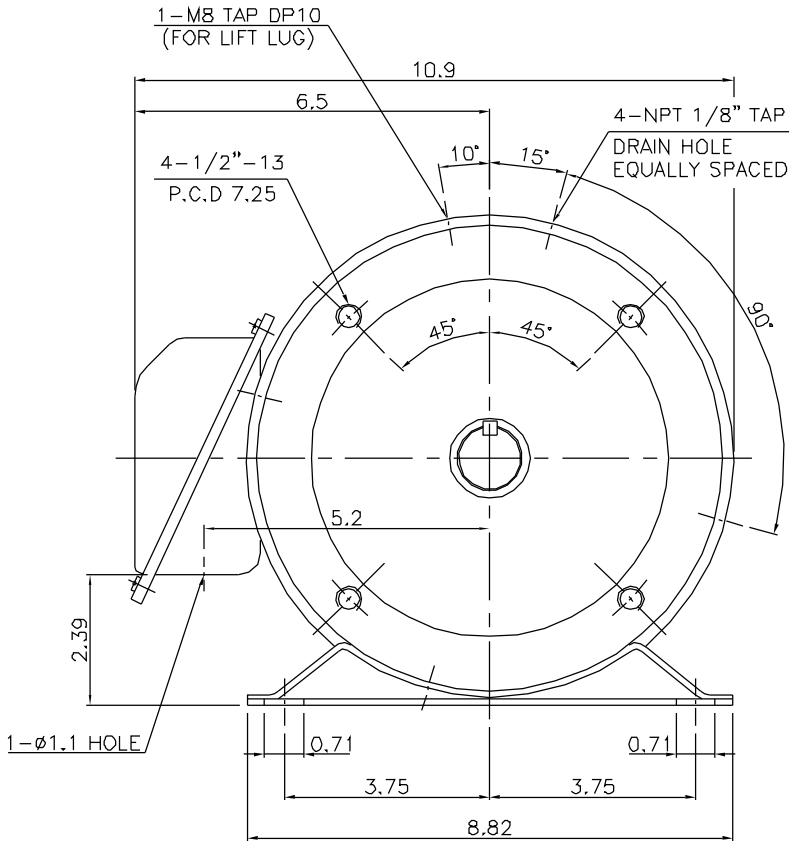

TITLE
OUTLINE
(5HP x 2P, 184T)

STERLING
ELECTRIC, INC.