SB MOTOR
FOOTED, TENV

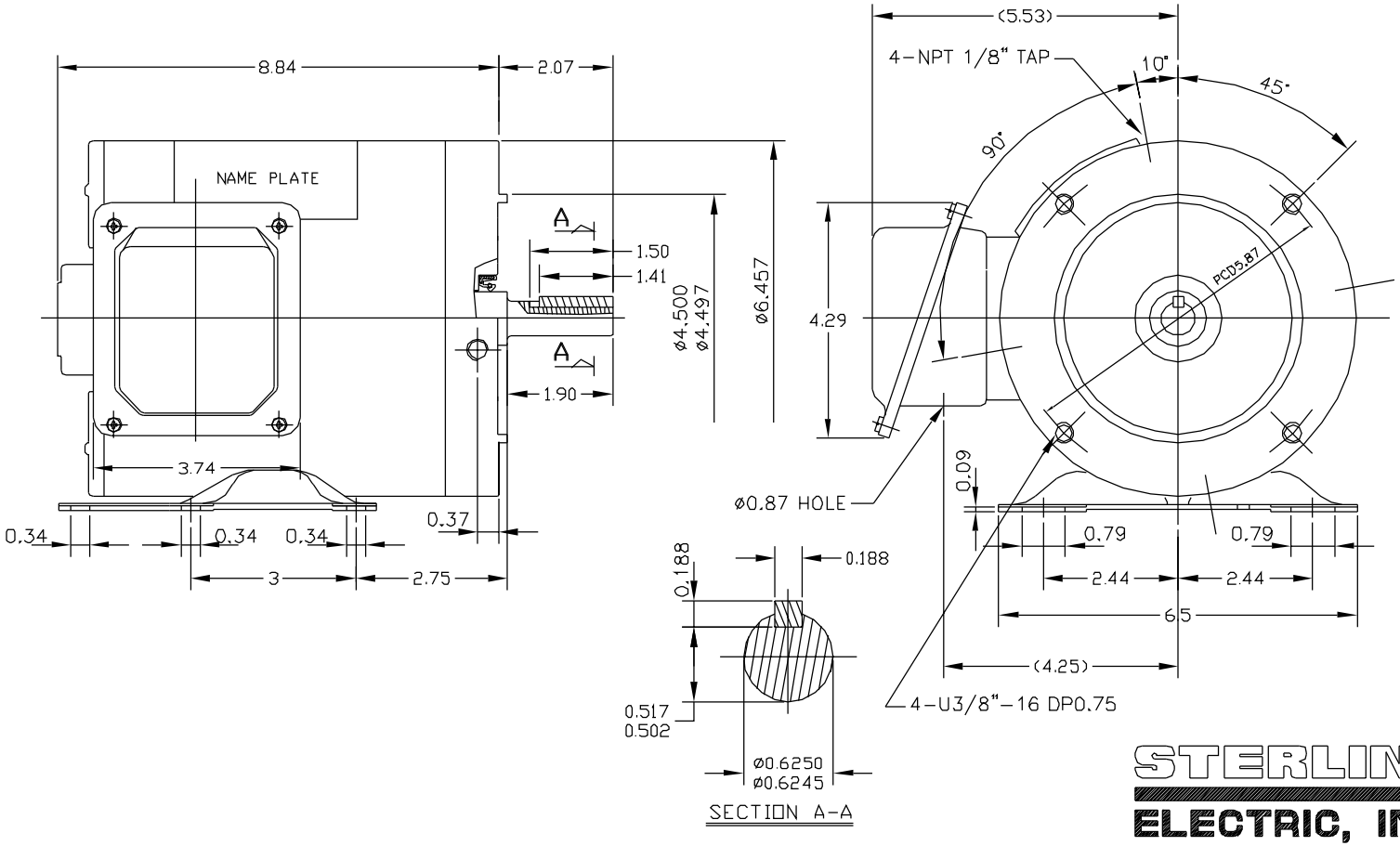

STERLING ELECTRIC, INC.