XB MOTOR
FOOTLESS, TEFC

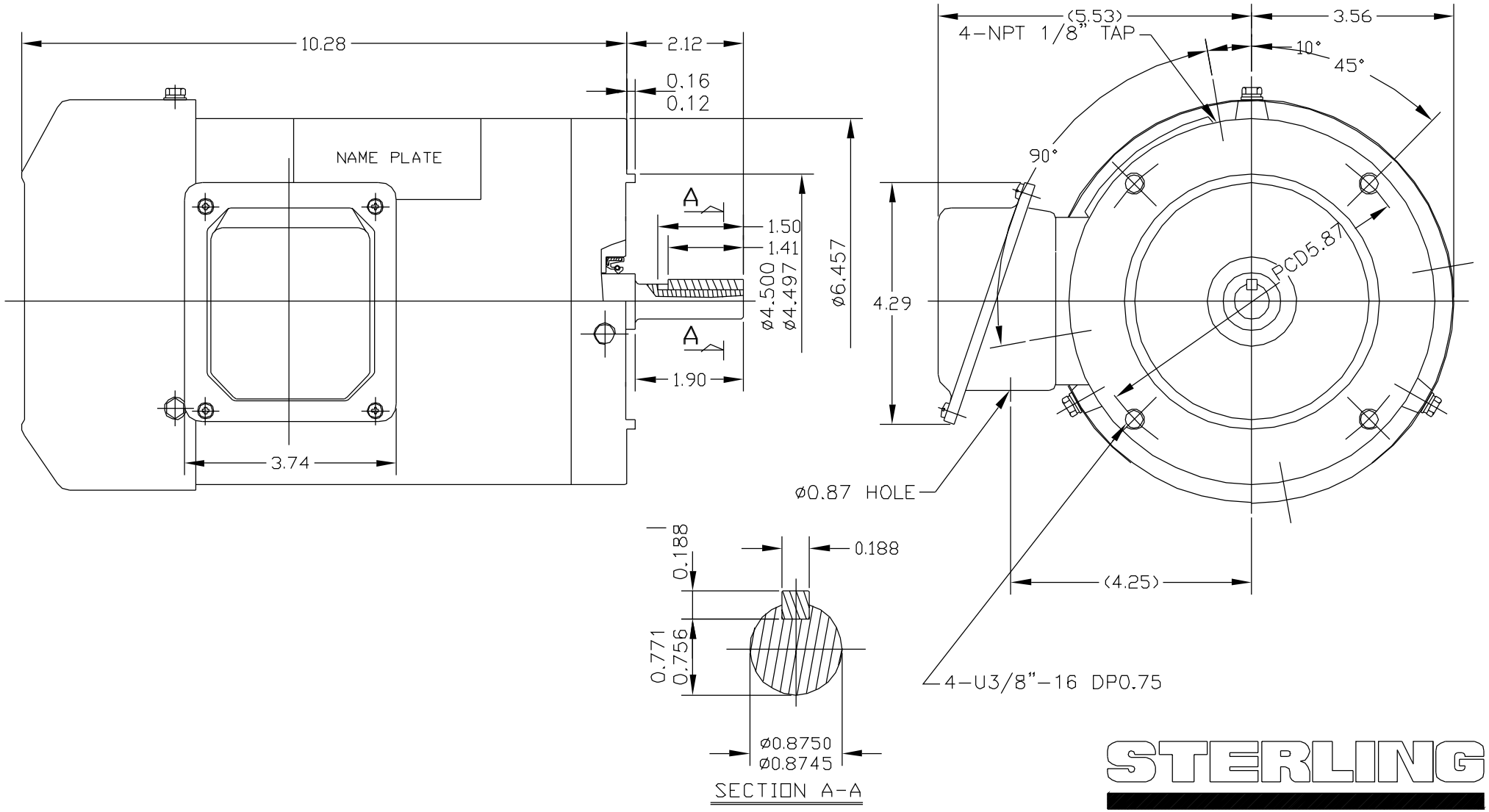

STERLING
ELECTRIC, INC.